STP12IE90F4

Emitter Switched Bipolar Transistor
ESBT® 900 V - 12 A - 0.083 Ω

General features

$V_{CS(ON)}$	I_C	$R_{CS(ON)}$
1V	12A	0.083 Ω

- High voltage / high current Cascode configuration
- Low equivalent on resistance
- Very fast-switch up to 150 kHz
- Squared RBSOA up to 900V
- Very low C_{iss} driven by R_G = 47Ω
- Very low turn-off cross over time

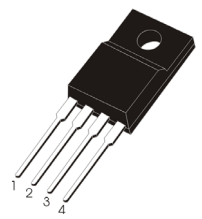

TO220FP-4L

Applications

- Flyback SMPS for adapter
- Flyback / forward SMPS for desktop

Description

The STP12IE90F4 is manufactured in Monolithic ESBT Technology, aimed to provide best performances in high frequency / high voltage applications.

It is designed for use in Gate Driven based topologies.

Internal schematic diagrams

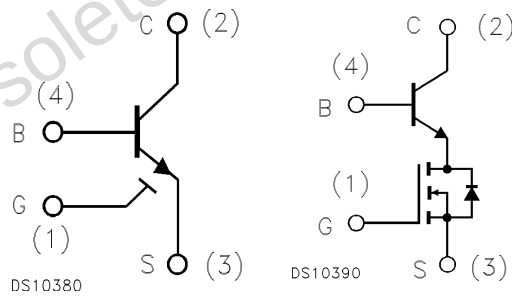

Order codes

Part Number	Marking	Package	Packing
STP12IE90F4	P12IE90F4	TO220FP-4L	Tube

Obsolete Product(s) - Obsolete Product(s)

Contents

1 Electrical ratings 3

2 Electrical characteristics 4

2.1 Electrical characteristics (curves) 5

2.2 Test circuits 7

3 Package mechanical data 8

4 Revision history 10

Obsolete Product(s) - Obsolete Product(s)

1 Electrical ratings

Table 1. Absolute maximum rating

Symbol	Parameter	Value	Unit
$V_{CS(SS)}$	Collector-source voltage ($V_{BS} = V_{GS} = 0$ V)	900	V
$V_{BS(OS)}$	Base-source voltage ($I_C = 0$, $V_{GS} = 0$ V)	30	V
$V_{SB(OS)}$	Source-base voltage ($I_C = 0$, $V_{GS} = 0$ V)	17	V
V_{GS}	Gate-source voltage	$\pm$ 17	V
I_C	Collector current	12	A
I_{CM}	Collector peak current (t_P < 5ms)	36	A
I_B	Base current	6	A
I_{BM}	Base peak current (t_P < 5ms)	10	A
P_{tot}	Total dissipation at T_c = 25°C	21	W
T_{stg}	Storage temperature	-40 to 150	°C
T_J	Max. operating junction temperature	150	°C

Table 2. Thermal data

Symbol	Parameter	Value	Unit
$R_{thj-case}$	Thermal resistance junction-case max	6	°C/W

Obsolete Product(s) - Obsolete Product(s)

2 Electrical characteristics

(T_{case} = 25°C unless otherwise specified)

Table 3. Electrical characteristics

Symbol	Parameter	Test Conditions	Min.	Typ.	Max.	Unit
$I_{CS(SS)}$	Collector-source current ($V_{BS} = V_{GS} = 0$)	V_{CE} = 900V			100	µA
$I_{BS(OS)}$	Base-source current ($I_C = 0$, $V_{GS} = 0$)	$V_{BS(OS)}$ = 30V			10	µA
$I_{SB(OS)}$	Source-base current ($I_C = 0$, $V_{GS} = 0$)	$V_{SB(OS)}$ = 17V			100	µA
$I_{GS(OS)}$	Gate-source leakage	V_{GS} = ± 17V			100	nA
$V_{CS(ON)}$	Collector-source ON voltage	V_{GS} = 10V I_C = 12A I_B = 2.4A V_{GS} = 10V I_C = 6A I_B = 0.6A		1 0.6		V V
h_{FE}	DC current gain	V_{GS} = 10V I_C = 12A V_{CS} = 1V V_{GS} = 10V I_C = 6A V_{CS} = 1V		5 15		
$V_{BS(ON)}$	Base Source ON voltage	V_{GS} = 10V I_C = 12A I_B = 2.4A V_{GS} = 10V I_C = 6A I_B = 0.6A		1.5 1.2		V V
$V_{GS(th)}$	Gate threshold voltage	$V_{BS} = V_{GS}$ I_B = 250µA	2	3	4	V
C_{iss}	Input capacitance	V_{CS} =25V f =1MHz V_{GS}=0V		520		pF
$Q_{GS(tot)}$	Gate-source Charge	V_{CS}=25V V_{GS}=10V V_{CB}=0V I_C =4A		21.3		nC
t_s t_f	INDUCTIVE LOAD Storage time Fall time	V_{GS} =10V R_G =47Ω V_{Clamp} =720V t_p =4µs I_C =6A I_B =1.2A		610 10		ns ns
t_s t_f	INDUCTIVE LOAD Storage time Fall time	V_{GS} =10V R_G =47Ω V_{Clamp} =720V t_p =4µs I_C =6A I_B =0.6A		360 10		ns ns
V_{CSW}	Maximum collector-source voltage switched without snubber	R_G =47Ω h_{FE} =5 I_C = 12A	900			V

Obsolete Product(s) - Obsolete Product(s)

Table 3. Electrical characteristics

Symbol	Parameter	Test Conditions	Min.	Typ.	Max.	Unit
$V_{CS(dyn)}$	Collector-source dynamic voltage (500ns)	V_{CC} =V_{Clamp} =400V V_{GS} =10V I_C = 6A I_B = 1.2A t_{peak} =500ns R_G =47Ω I_{Bpeak} = 6A (I_C)		3.37		V
$V_{CS(dyn)}$	Collector-source dynamic voltage (1µs)	V_{CC} =V_{Clamp} =400V V_{GS} =10V I_C = 6A I_B = 1.2A t_{peak} =500ns R_G =47Ω I_{Bpeak} = 6A (I_C)		1.75		V

2.1 Electrical characteristics (curves)

Figure 1. DC current gain

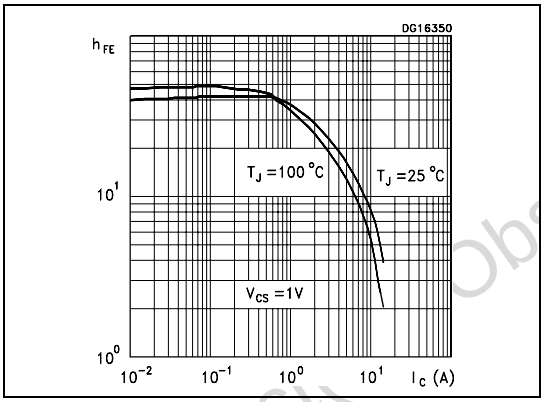

Figure 2. Collector-source On voltage

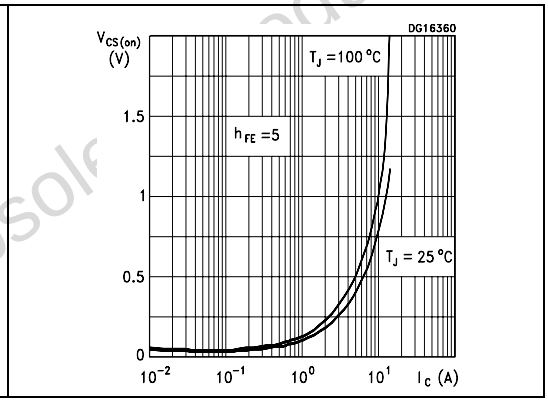

Figure 3. Collector-source On voltage

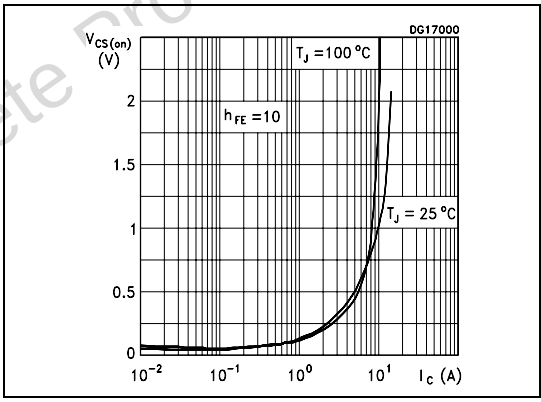

Figure 4. Base-source On voltage

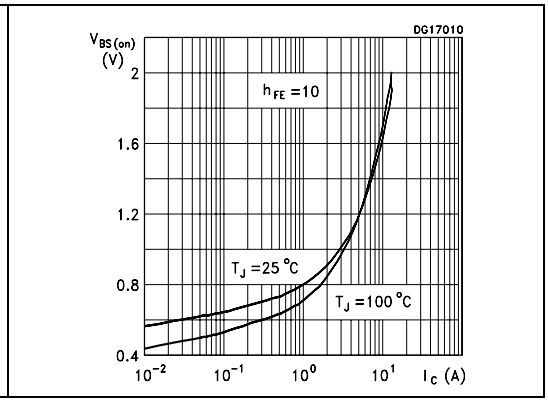

Obsolete Product(s) - Obsolete Product(s)

Figure 5. Reverse biased SOA

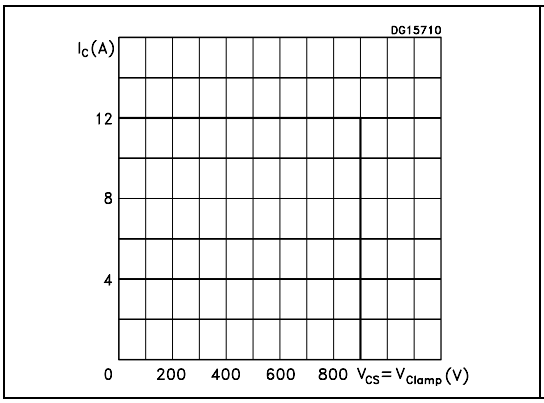

Figure 6. Dynamic collector-emitter voltage

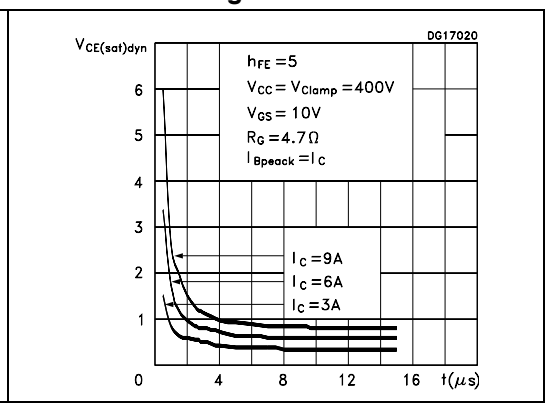

Figure 7. Inductive load switching time

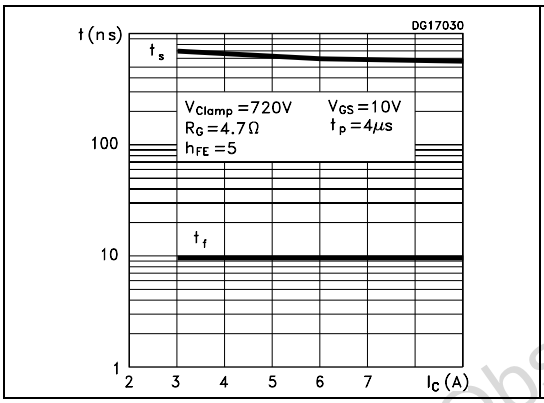

Figure 8. Inductive load switching time

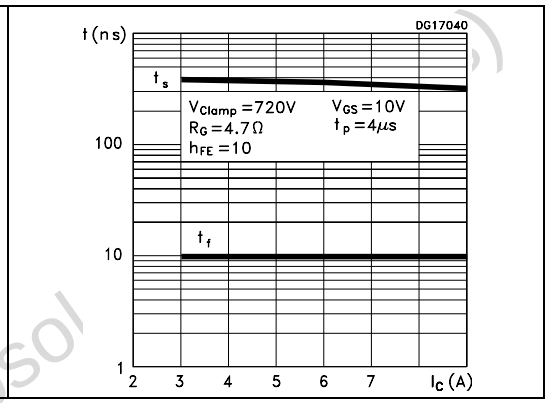

Obsolete Product(s) - Obsol

2.2 Test circuits

Figure 9. Static $V_{CS(ON)}$ test circuits

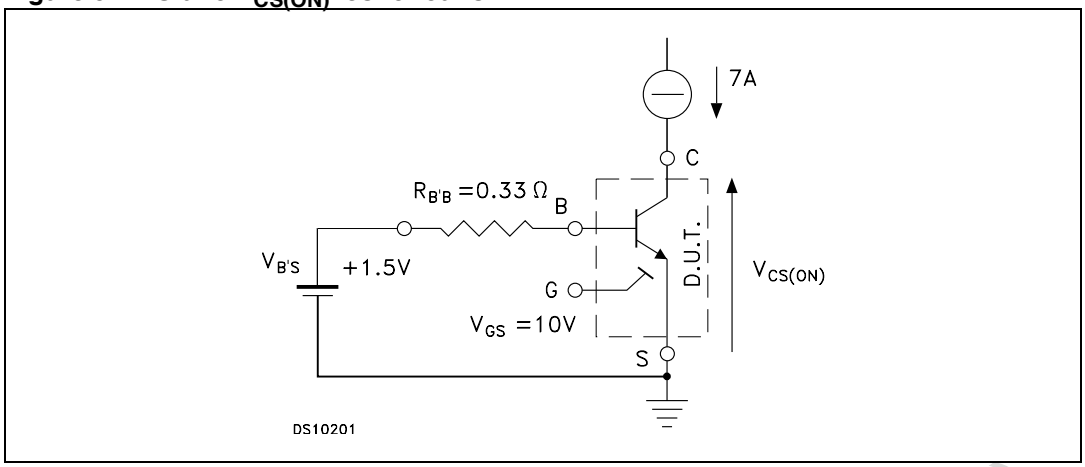

Figure 10. Inductive load switching and RBSOA test circuit

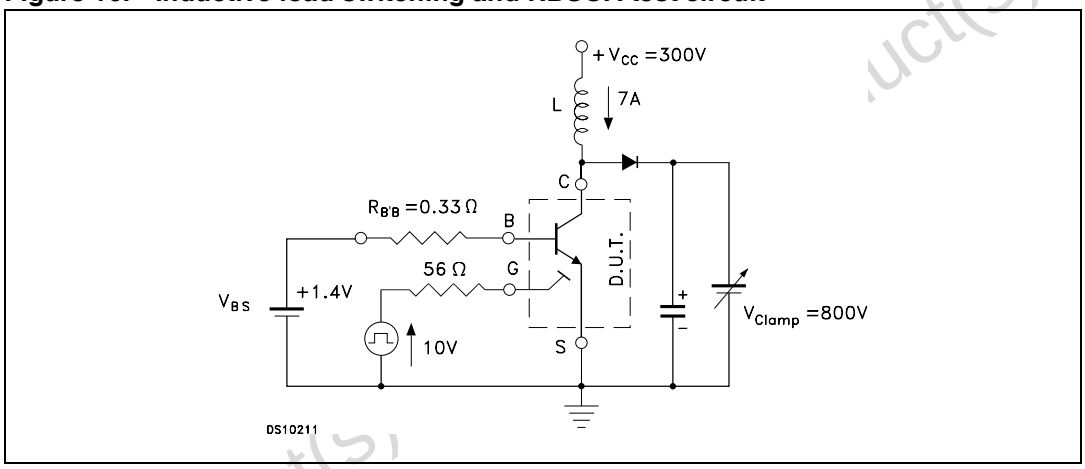

Obsolete Product(s)

3 Package mechanical data

In order to meet environmental requirements, ST offers these devices in ECOPACK® packages. These packages have a Lead-free second level interconnect. The category of second level interconnect is marked on the package and on the inner box label, in compliance with JEDEC Standard JESD97. The maximum ratings related to soldering conditions are also marked on the inner box label. ECOPACK is an ST trademark. ECOPACK specifications are available at: www.st.com

Obsolete Product(s) - Obsolete Product(s)

TO220FP-4L MECHANICAL DATA

DIM.	mm.		
	MIN.	TYP	MAX.
A	4.30		4.70
A1	2.60		3
A2	1.30	1.50	1.70
b	0.50		0.70
b1	1.05		
b2			1.30
b3	1.25		
b4			1.50
c	0.45	0.50	0.60
D	15.50		15.90
E	9.80		10.20
e	2.29	2.54	2.79
e1		7.62	
H1	6.30		6.70
L		13.60	
L1		3.30	
L2	15.40		15.80
Dia P	3		3.40
Q	3.30		3.50

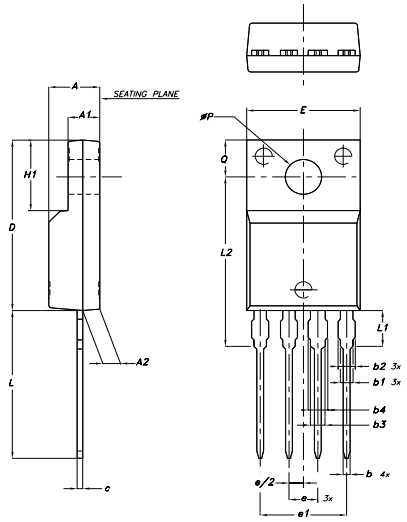

Obsolete

4 Revision history

Table 4. Revision history

Date	Revision	Changes
28-Jul-2006	1	Initial release.
16-Jan-2007	2	New graphics

Obsolete Product(s) - Obsolete Product(s)

Please Read Carefully:

Information in this document is provided solely in connection with ST products. STMicroelectronics NV and its subsidiaries (“ST”) reserve the right to make changes, corrections, modifications or improvements, to this document, and the products and services described herein at any time, without notice.

All ST products are sold pursuant to ST’s terms and conditions of sale.

Purchasers are solely responsible for the choice, selection and use of the ST products and services described herein, and ST assumes no liability whatsoever relating to the choice, selection or use of the ST products and services described herein.

No license, express or implied, by estoppel or otherwise, to any intellectual property rights is granted under this document. If any part of this document refers to any third party products or services it shall not be deemed a license grant by ST for the use of such third party products or services, or any intellectual property contained therein or considered as a warranty covering the use in any manner whatsoever of such third party products or services or any intellectual property contained therein.

UNLESS OTHERWISE SET FORTH IN ST’S TERMS AND CONDITIONS OF SALE ST DISCLAIMS ANY EXPRESS OR IMPLIED WARRANTY WITH RESPECT TO THE USE AND/OR SALE OF ST PRODUCTS INCLUDING WITHOUT LIMITATION IMPLIED WARRANTIES OF MERCHANTABILITY, FITNESS FOR A PARTICULAR PURPOSE (AND THEIR EQUIVALENTS UNDER THE LAWS OF ANY JURISDICTION), OR INFRINGEMENT OF ANY PATENT, COPYRIGHT OR OTHER INTELLECTUAL PROPERTY RIGHT.

UNLESS EXPRESSLY APPROVED IN WRITING BY AN AUTHORIZE REPRESENTATIVE OF ST, ST PRODUCTS ARE NOT RECOMMENDED, AUTHORIZED OR WARRANTED FOR USE IN MILITARY, AIR CRAFT, SPACE, LIFE SAVING, OR LIFE SUSTAINING APPLICATIONS, NOR IN PRODUCTS OR SYSTEMS, WHERE FAILURE OR MALFUNCTION MAY RESULT IN PERSONAL INJURY, DEATH, OR SEVERE PROPERTY OR ENVIRONMENTAL DAMAGE. ST PRODUCTS WHICH ARE NOT SPECIFIED AS “AUTOMOTIVE GRADE” MAY ONLY BE USED IN AUTOMOTIVE APPLICATIONS AT USER’S OWN RISK.

Resale of ST products with provisions different from the statements and/or technical features set forth in this document shall immediately void any warranty granted by ST for the ST product or service described herein and shall not create or extend in any manner whatsoever, any liability of ST.

ST and the ST logo are trademarks or registered trademarks of ST in various countries.

Information in this document supersedes and replaces all information previously supplied.

The ST logo is a registered trademark of STMicroelectronics. All other names are the property of their respective owners.

© 2007 STMicroelectronics - All rights reserved

STMicroelectronics group of companies

Australia - Belgium - Brazil - Canada - China - Czech Republic - Finland - France - Germany - Hong Kong - India - Israel - Italy - Japan - Malaysia - Malta - Morocco - Singapore - Spain - Sweden - Switzerland - United Kingdom - United States of America

www.st.com